S5000 Signal Management System and Power Supply User Guide

Doc# 14797
November 2004

SIGMA ELECTRONICS's products, including the S5000 and related components, are certified to comply with the regulations and recommendations of several certifying agencies.

For complete details, as well as copies of the certification documents, please visit our website at www.sigmaelectronics.com or contact us using the Technical Support contacts listed elsewhere in this document.

SYMBOLS

The presence of this symbol in or on SIGMA ELECTRONICS equipment means that it has been designed, tested and certified as complying with applicable Underwriter's Laboratory (USA) regulations and recommendations.

The presence of this symbol in or on SIGMA ELECTRONICS equipment means that it has been designed, tested and certified as essentially complying with all applicable European Union (CE) regulations and recommendations.

COPYRIGHT AND TRADEMARKS

DISCLAIMER OF LIABILITY

Contents of this publication are current as of the publication date. SIGMA ELECTRONICS reserves the right to change the contents without prior notice. **In no event shall SIGMA ELECTRONICS be liable for any damages resulting from loss of data, loss of use, or loss of profits and SIGMA ELECTRONICS further disclaims any and all liability for indirect, incidental, special, consequential or other similar damages. This disclaimer of liability applies to all products, publications, and services during and after the warranty period.**

SIGMA ELECTRONICS
P.O. Box 448
East Petersburg, PA 17520, USA
In USA and Canada: 1-866-569-2681
Outside USA and Canada: 717-569-2681
FAX: 717-569-4056
E-mail: sales@sigmaelectronics.com

TECHNICAL SUPPORT

SIGMA ELECTRONICS has made every effort to ensure that the equipment you receive is in perfect working order. In the event that problems arise which you cannot resolve, or if there are any questions regarding this equipment or information about other products manufactured by SIGMA ELECTRONICS, please contact your local representative or contact SIGMA ELECTRONICS directly through one of the appropriate means listed below:

Telephone:* Main Number - 1-717-569-2681*
Technical Support - 1-717-569-2681
Sales - 1-866-569-2681/1-717-569-2681

Facsimile: Main Number - 1-717-569-4056
Sales - 1-717-569-4056

Mail: Technical Support - service@sigmaelectronics.com
Sales - sales@sigmaelectronics.com

Web Site: http://www.sigmaelectronics.com

Mail: SIGMA ELECTRONICS
P.O. Box 448
East Petersburg, PA 17520, USA

Shipping:* SIGMA ELECTRONICS
1027 Commercial Avenue
East Petersburg, PA 17520, USA

* Return Authorization required before any equipment is returned.

The following information is included for reference only. Please consult local electrical codes for specific information relating to your situation. The power cords supplied with this equipment provide the only means of mains disconnection. The socket-outlet should be installed near the equipment and should be easily accessible as well as clearly marked.

NORTH AMERICAN POWER SUPPLY CORDS

The North American power cords supplied with this equipment have a molded grounding plug (NEMA 5-15P) at one end and molded grounding receptacle (IEC 320-C13) at the other end (see figure below). Conductors are CEE color-coded: Light blue (neutral), Brown (line) and Green or Green/Yellow (ground). Operation of this equipment at voltages exceeding 130 VAC will require power supply cords which comply with NEMA configurations.

INTERNATIONAL POWER SUPPLY CORDS

The International power cords supplied with this equipment have a molded grounding receptacle (IEC 320-C13) at one end and a molded CEE7/7 plug at the other end (see figure below). Conductors are CEE color-coded: Light blue (neutral), Brown (line) and Green/Yellow (ground). Other IEC 320-C13 type power supply cords can be used if they comply with the safety regulations of the country in which they are installed.

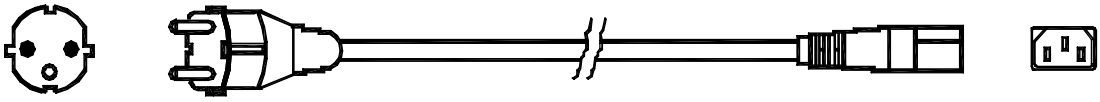

TABLE OF CONTENTS

INTRODUCTION/OVERVIEW

The S5000 Signal Management System provides an economical yet extremely versatile platform for signal distribution and processing tasks.

Separate left and right passive rear backplanes permit differing tasks to reside within the same frame.

PRODUCT SCOPE

The S5000 is shipped with (1) power supply and (2) backplane adapters. Three styles of rear backplane are available From SIGMA ELECTRONICS as well as a wide variety of distribution and processing modules. Modules and the appropriate mating backplane options are summarized below. A redundant power supply is available as an option.

Table 1. S5000 Series Modules and Supported Backplanes

Module	Function	Supported Backplanes			
		RP302 Twisted Pair AES	RP303 BNC AES Analog Video	RP305 HD-SDI SD-SDI	NVision IO594 Optical
DA5305	Quad AES A-D Converter	X	X		CONTACT NVISION
DA5310	Quad AES D-A Converter	X	X		
DA5315	OctaStream AES Delay	X	X		
DA5320	OctaStream AES Router/Mixer	X	X		
DA5325	OctaStream AES Sample Rate Converter	X	X		
DV5505	SDI Monitor DA			X	
DV5515	HD-SD Synchronizer			X	
SG5605	OctaStream Reference Generator	X	X		
SG5610	HD/SD Reference Generator			X	
HD5805	HD-SDI DA 1x 8			X	
CI5705	5000 Controller Interface	None Needed			

RECEIVING INSPECTION AND UNPACKING

By the time you have found and opened this manual, you have already begun to unpack the shipping container. Since damage may have occurred in shipping it is important to perform the following checks immediately:

- Inspect the shipping container(s) for damage.
- If you find any damage to the containers, carefully inspect the product for damage.
- If any damage is discovered, notify the shipping carrier immediately.

Compare what you received against the packing slip. If anything is missing or has suffered damage unrelated to shipping, contact SIGMA ELECTRONICS Technical Support immediately. Contact information is located at the front of this manual.

BACKPLANE CONFIGURATION

The S5000 can be easily reconfigured in the field if requirements change. Typically the rear backplanes need to be replaced to accommodate a different module loading. If you obtained the S5000 with no rear backplanes installed, or simply need to replace one refer to the steps and figure below.

1. Remove AC power connection(s) to the frame by disconnecting the line cord(s).
2. Disconnect all cables from the frame and remove the frame from the rack. DO NOT attempt to change backplanes with the frame installed!
3. Remove all modules from the affected side of the frame.
4. Remove the screws holding the backplane in place.
5. Gently pull the backplane assembly rearward and out of the frame.
6. Install the replacement backplane being careful not to damage the copper EMI gasket or motherboard I/O pins. It helps to line up the I/O pin side of the backplane first.
7. Install modules, reconnect cabling and apply AC power.

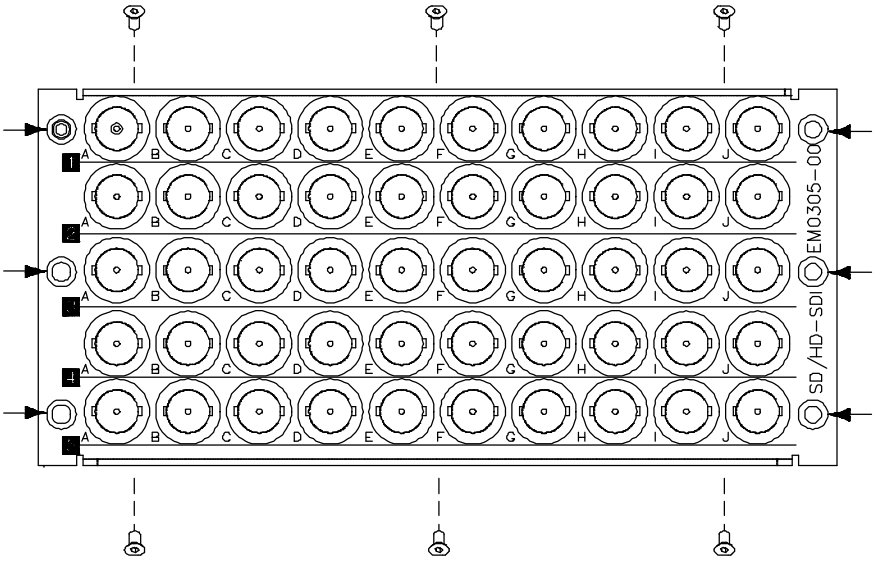

Figure 1. Removing the I/O Backplane

S5000 backplane options

RP305 SWB I/O

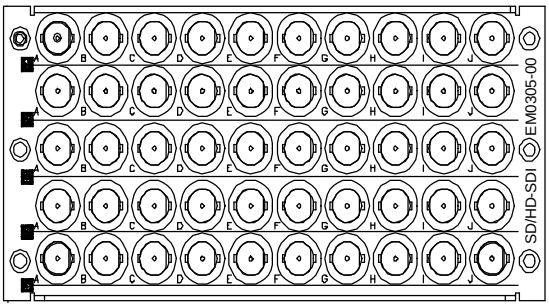

RP303 BNC I/O

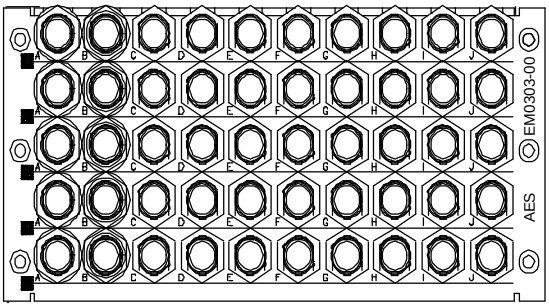

RP302 Twisted Pair I/O

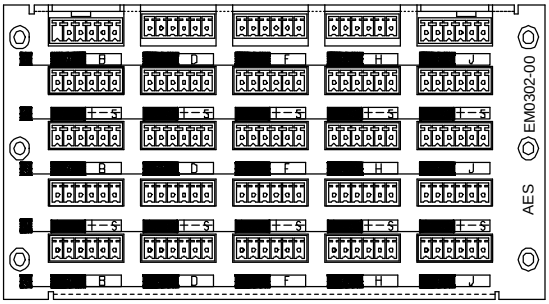

Figure 2. S5000 backplanes

S5000 FRAME DESCRIPTION

The S5000 Signal Management System (part number S5000) consists of a 2 rack unit (RU) high metal frame assembly that installs in a standard 19” wide equipment rack. The frame includes a built-in motherboard (EM0328) that provides module interconnections and a power distribution board (EM0326) for distributing power from the AC inputs to the power supplies.

A removable front door with built-in cooling fan provides cooling and EMI suppression. Modules slide into the frame from the front and plug into the backplane and motherboard. Information about the modules is presented in the individual module User Guides.

Figure 3 illustrates the S5000 Frame front view (door open), showing the slots for the slide-in printed circuit modules. The following list of printed circuit modules is keyed to the numbers on the illustration:

Frame Front View

❶	**PS5000 Power Supplies:** Two power supply modules slide into the center of the frame from the front. One is standard, the other redundant (optional). The power supplies accept 90-130/ 180-250 VAC (auto-ranging) and produce DC power for all modules.
❷	**Left Bay of 5 Modules:** Any of the available modules may be inserted into these slots, depending on the backplane. Note that different backplanes are required for SDI/HD-SDI video, balanced AES and unbalanced AES.
❸	**Right Bay of 5 Modules:** Any of the available modules may be inserted into these slots, depending on the backplane. Note that different backplanes are required for SDI/HD-SDI video, balanced AES and unbalanced AES.
❹	**CI5705 Communication Interface:** The module that provides communication between modules in the frame and other frames is located above the power supply modules.

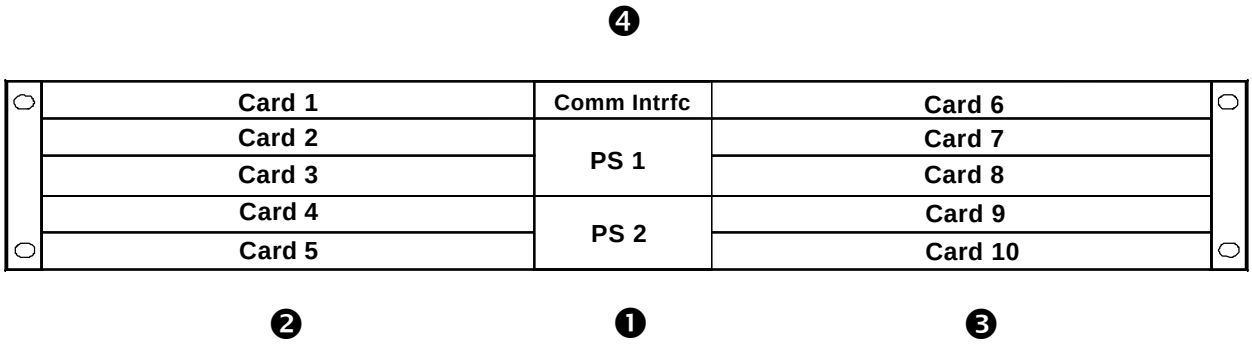

Figure 3. S5000 Front View with the Door Removed

Frame Rear View

Figure 4 illustrates the S5000 Frame rear view. The following list, which is keyed to the figure, explains the purpose of the connectors on the rear panel.

❶	**Video Reference Inputs:** Analog NTSC or PAL looping 75 ohm reference video input. Not used with DA modules.
❷	**IEC Standard AC power connectors:** Connect to AC power.
❸	**Alarms Connector:** Open collector type power supply alarm outputs. May be connected to a customer-supplied alarm indicator.
❹	**Network Connector:** RS-485 9-pin D connector. Commands and queries to the CI5705 Communication Interface are made through this connector.
❺	**Input/Output Connectors:** Connect inputs and outputs to the modules using these connectors. Connectors are mounted in rows directly behind the modules they serve. For example, the top row of connectors corresponds to the top module.

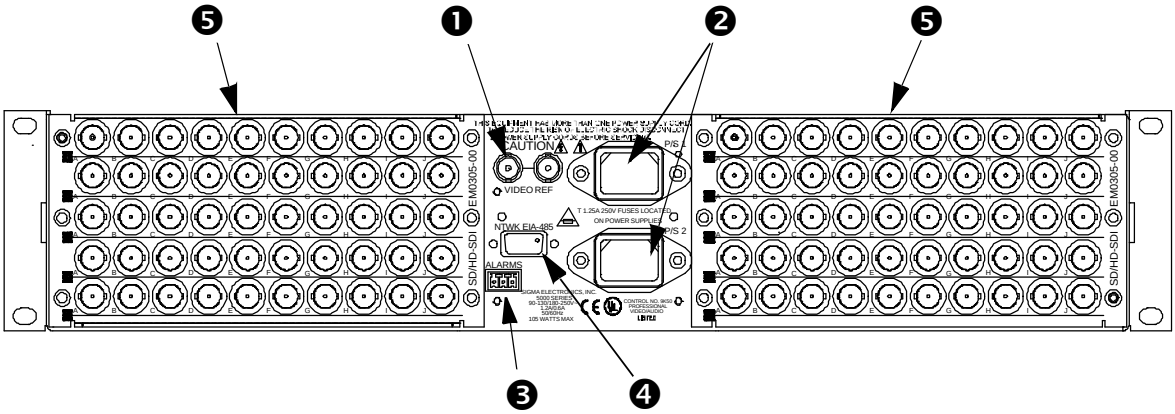

Figure 4. S5000 Rear Panel

Frame I/O Backplane Descriptions

Three I/O backplanes are currently available for the S5000 frame. All three backplanes are completely passive and contain no active circuitry:

- SDI/HD-SDI Digital Video I/O (RP305)—Accepts SDI or HD-SDI modules. Contains high quality, high data rate BNC connectors.
- AES Unbalanced I/O (RP303)—Accepts AES digital audio and analog video modules. Uses standard BNC connectors for single-ended connections.
- AES Balanced I/O (RP302)—Accepts AES digital audio modules. Uses Phoenix terminal block connectors for balanced connections.

The backplanes install independently on the back of the frame. The same backplane can be used on both sides, or you can mix backplanes on the same frame.

S5000 FRAME SPECIFICATIONS

Table 2 lists specifications for the S5000 Signal Management System.

Table 2. S5000 Frame Specifications

Type	Parameter
Electrical	
AC Power	90-130/180-250 VAC, 50/60Hz, Auto-ranging
AC Fuses	1.25T - 1.25A, 250V SloBlo, 5 x 20 mm
AC Connectors	2, IEC Filtered AC
Power Consumption	105 Watts (maximum)
Regulatory Compliance	UL Listed and CE Compliant
Mechanical	
Module Slots	10
Power Supply Slots	2 (1 Main, 1 Optional Redundant)
Dimensions	EIA Standard 2 RU (3.5 inches, 89 mm) High 19.0 inches (482.6 mm) Wide 15.0 inches (381 mm) Deep
Weight (fully loaded)	25 lbs (11.35 kg) maximum.
Video Ref Input	
Type	Analog PAL and/or NTSC Color Black (not required for DAs)
Connectors	BNC with loop-thru
Return Loss	>30dB to 5MHz
External Communications Port	
Type	EIA-485 (reserved for future use)
Connectors	1 9-pin D
External Alarm Port	1 3-pin Phoenix
Environmental	
Operating Temperature	0 to 40 degrees Centigrade, ambient
Relative Humidity	0 to 90%, non-condensing

INSTALLING THE FRAME IN A RACK

To install the S5000 frame in an equipment rack, see Figure 5 and follow these steps:

Warning: *The power cords supplied with the S5000 provide the only means of AC mains disconnection. The equipment must be located near the AC source power outlet and the outlet must be easily accessible to allow power to the equipment to be disconnected quickly in an emergency.*

1. Determine the placement of the 2 RU frame in the rack.

   Note: Be sure to allow unrestricted cooling air flow through the front and sides of the frame. Frames may be stacked with no space in between.

2. Attach the rack support brackets to the rear rack rails.
3. Attach the rear rack supports to the sides of the frame.
4. Lift the frame into position, inserting the rear rack supports into the slots in the rack support brackets.
5. Secure the rack ears at the front frame to the rack with rack screws.

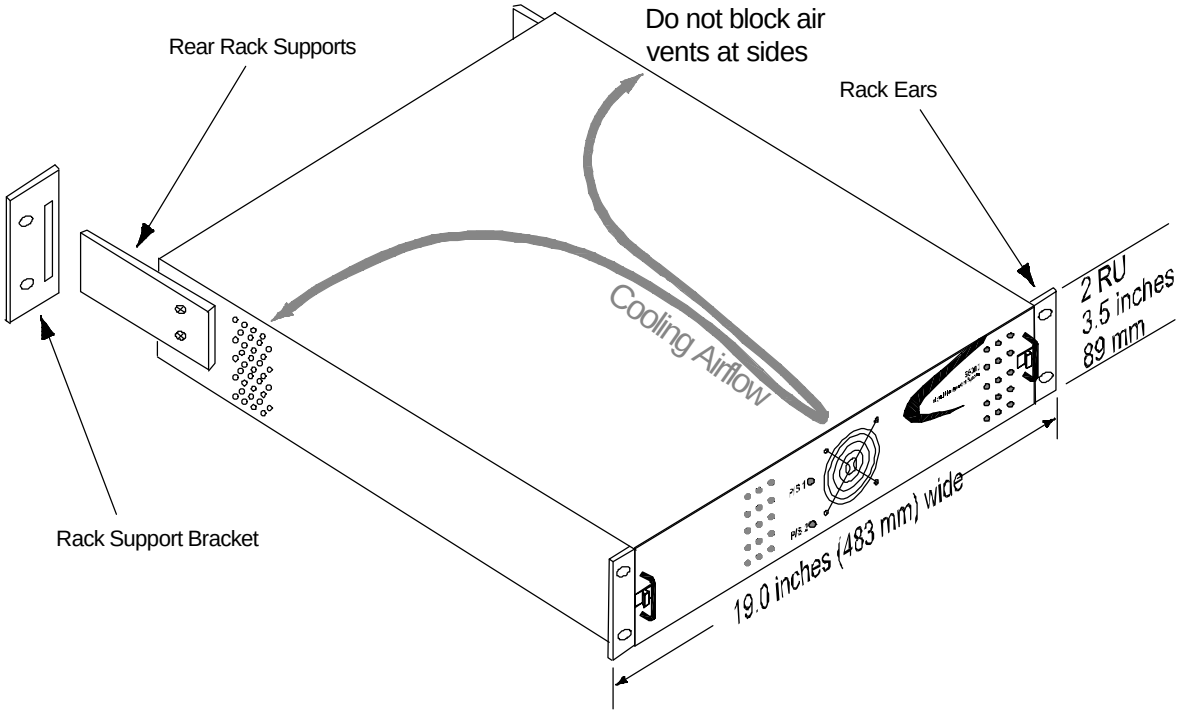

Figure 5. Frame Installation

Frame Door Installation and Removal

The frame door includes latches on both sides that must be pressed inward in order to remove the door.

Caution: *Be careful not to drop and damage the door when you release the latches. The latches are the only mechanism holding the door in place.*

When installing the door, just push the door onto the frame and the latches will latch themselves automatically.

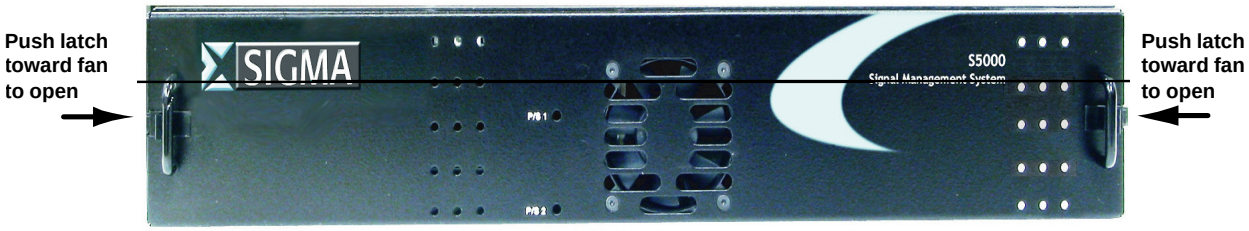

Figure 5-1. Removing the Frame Door

Power Supply and Communication Interface Installation and Removal

The Power Supply modules and Communication Interface install in the slots in the center of the frame. If you have only one power supply module, install it in the bottom center slot. The redundant supply installs directly above the main module.

The Power Supply module has a latch similar to the latches on the frame front cover to ensure the Power Supply remains in place.

- To insert the module, simply slide it into the cell until the connector seats and the latch snaps into position.
- To remove the Power Supply module, grasp the card pull tab while pushing the latch to the left and pull the card straight out of its slot. (See Figure 6.)

Caution: *(1) To prevent damage to the Power Supply module latch, be sure to press the latch open (to the left) when removing the module.*
Caution: *(2) Heat sinks and other components may be hot. To prevent burns, avoid touching components.*

The **Communication Interface** installs in the slot above the redundant Power Supply.

- To insert the module, simply slide it into the cell until the connector seats.
- To remove the Communication Interface module, grasp the extractor, pivot toward the front and pull the card straight out of its slot. (See Figure 6.)

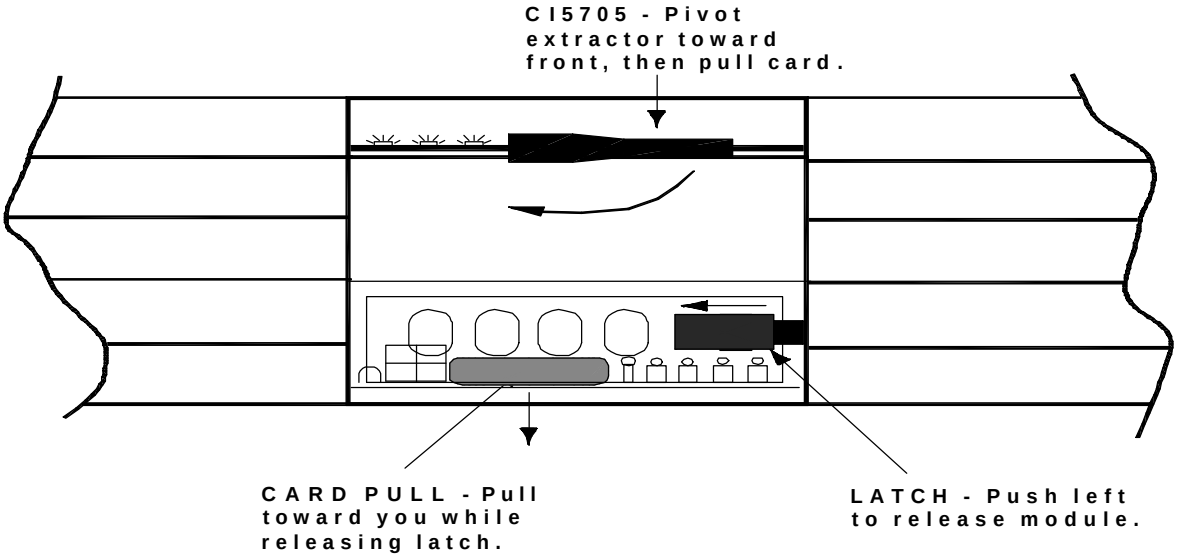

Figure 6. Removing the Power Supply Module

INSTALLING MODULES

Before you insert the printed circuit modules into the frame, make sure you are using the correct I/O backplane.

Table 3. S5000 Backplanes

Module Type	Model Number	Required I/O Backplane
Quad AES A-D Converter	DA5305	AES backplane
Quad AES D-A Converter	DA5310	AES backplane
OctaStream AES Delay	DA5315	AES backplane
OctaStream Router/Mixer	DA5320	AES backplane
OctaStream Sample Rate Converter	DA5325	AES backplane
OctaStream Ref Generator	SG5605	AES backplane
SDI Monitor DA	DV5505	SWB backplane
HD-SDI Synchronizer	DV5515	SWB backplane
HD-SDI Ref Generator	SG5610	SWB backplane
HD-SDI DA 1x8	HD5805	SWB backplane

You can now insert the circuit boards into the frame. Note that boards can be inserted and removed with power on. Referring to Figure 7, insert modules into any available card slots, making sure the correct I/O backplane is in place for the type of modules being inserted.

To install a module, simply insert it into the rails in the slot and push it toward the rear of the frame until it seats into place. Be sure to push firmly on the card when it contacts the I/O module to ensure it seats. Then make connections to it at the back of the frame.

Caution: *For proper cooling, the frame door must remain closed. The door may be opened for a short time, but irregular performance may occur. The temperature and performance will stabilize again within 5 minutes after the door is closed.*

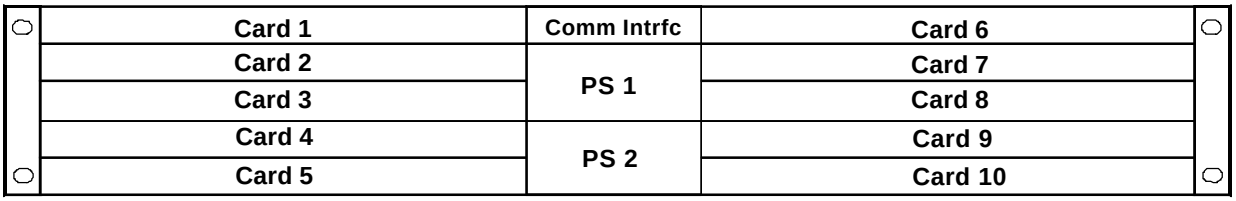

Figure 7. Card Locations in the Frame

MAKING CONNECTIONS TO THE FRAME

Make connections to the frame as described on the following pages. For the specific inputs and outputs of a particular module, please refer to the individual user guide for that module. The frame backplane (BNC) is shown in Figure 8 below.

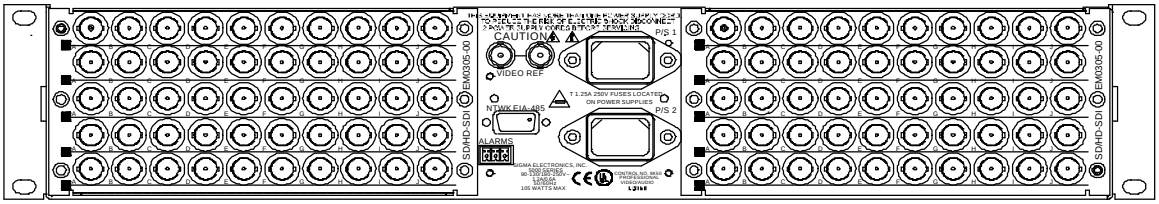

Figure 8. S5000 Frame I/O Backplane (RP305 SWB I/O)

Signal Input and Output Connections

Make connections to the AES audio, SDI video, or HD-SDI video signal input connectors as shown in Figure 9. Use 75 ohm cable for BNC connectors or 110 ohm shielded twisted pair cable for Phoenix connectors.

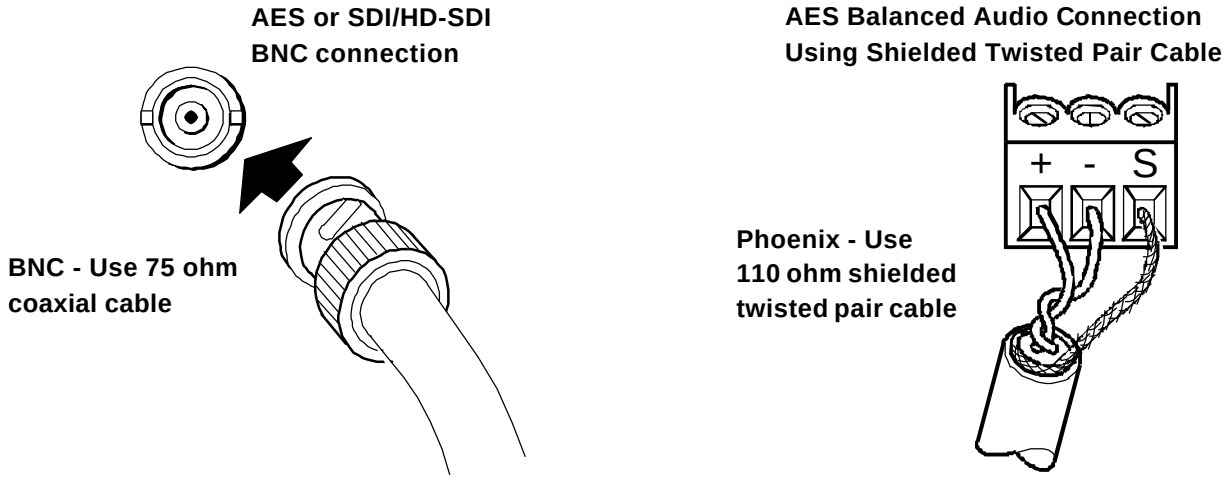

Figure 9. Typical Input and Output Connections

External Input and Output Terminations

Unused inputs of SDI modules and both the unused inputs and unused outputs of Super Wideband HD-SDI modules should be terminated using a customer-supplied 75-ohm external termination.

SDI outputs and AES inputs and outputs do not need to be terminated.

Alarm Connections

The ALARMS connector includes normally closed connections from pin 1 and pin 2 to COM, which is connected to chassis ground. If both Power Supply modules fail (or AC is disconnected from both), the pin 1 to COM circuit opens. The alarm associated with pin 2 is reserved for future use.

Figure 10 shows one circuit that can be used with the Alarms connector. It contains LEDs that are normally OFF and turn ON to indicate a failure.

Caution: *The power supply for the alarm circuit must not exceed 30 VDC or 150 mA. Load resistor value varies depending on voltage.*

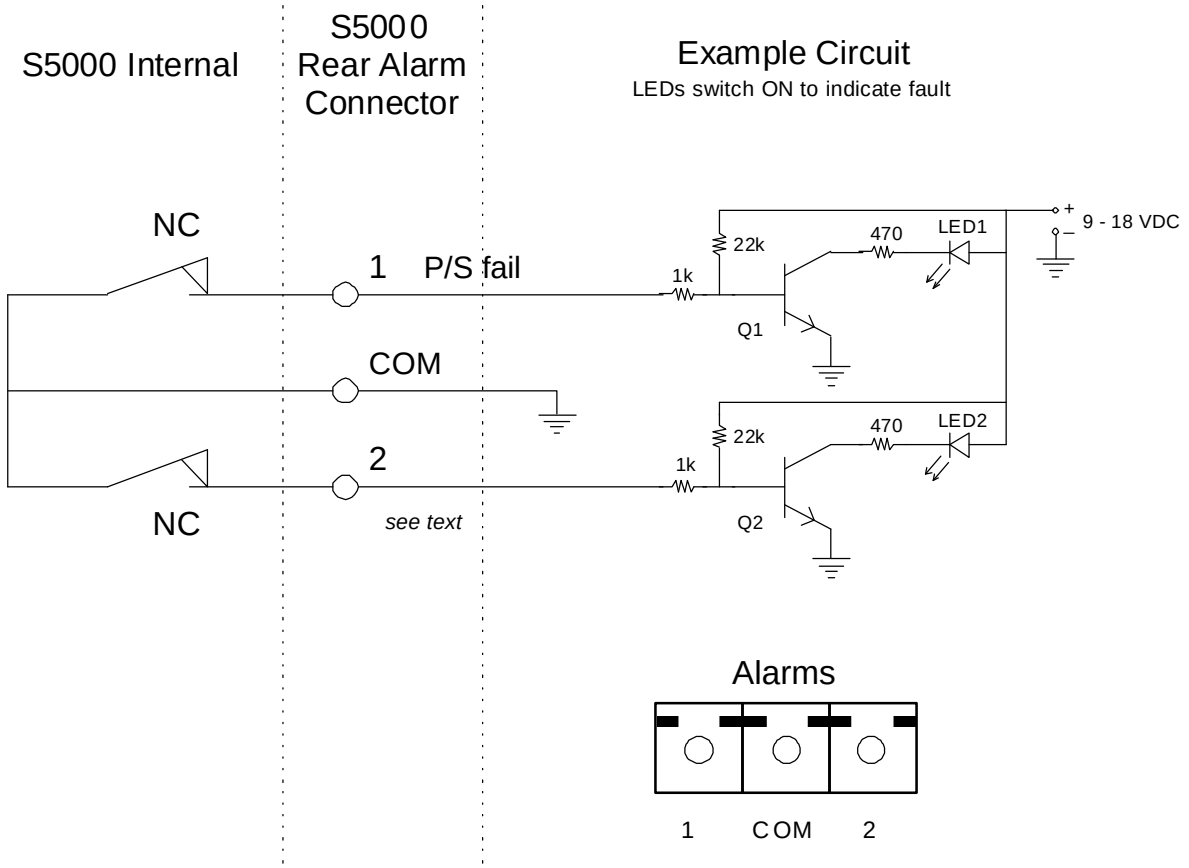

Figure 10. Alarm Connections

POWER SUPPLY MODULE (PS5000)

The Power Supply module accepts and adjusts automatically to a wide range of AC input voltages (90-130/180-250 VAC, 50/60 Hz). Regulators on the module rectify the AC to produce +/- 7 and +/- 15 VDC which is distributed to the other modules in the frame.

Figure 11 shows a block diagram of the Power Supply module. The input stage of the supply includes an AC power line fuse to protect the equipment and a Power Factor Correction (PFC) stage, which minimizes harmonics and peak currents on the line. Following this stage a Switching Regulator produces the required DC voltages. Sharing diodes on the DC rails allow redundant supplies to connect in parallel with isolation between the supplies. Power for the cooling fan and the green “power on” indicator LED comes from the +15 volt rail.

Key features of the power supply are the following:

- Power factor correction
- Auto-ranging; no input voltage selection required
- Fused input
- LED DC power present indicator
- Current, voltage, and power limiting
- Charge dump circuit drains hazardous voltages when the power supply is removed from the frame.

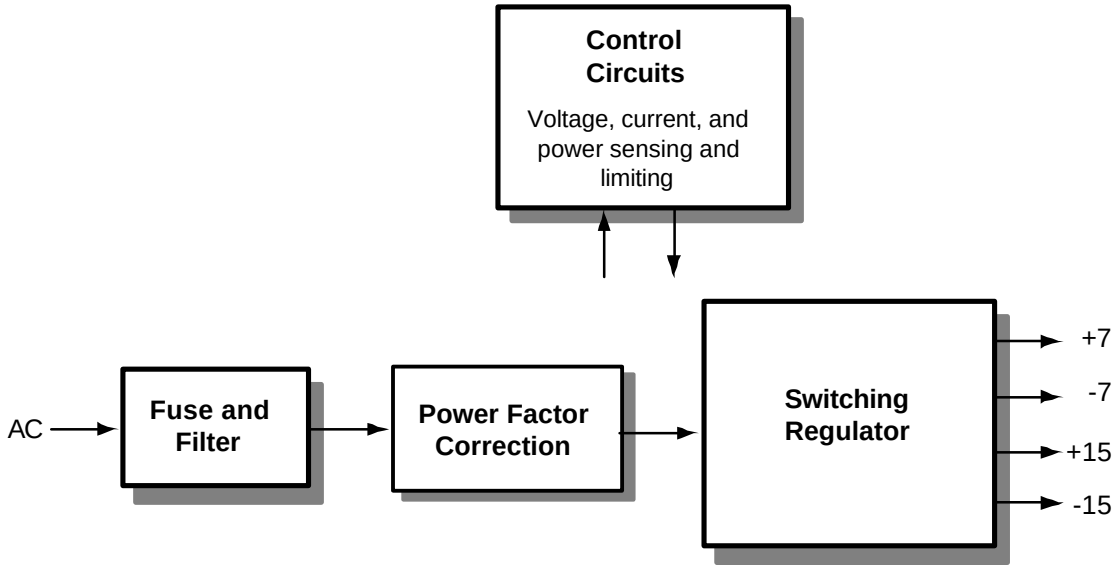

Figure 11. Power Supply Block Diagram

Power Supply Test Points

There are four test points on the front edge of the power supply modules. When checking the test points, test both the main and redundant supplies. The approximate range of voltages that may be expected at these points is listed below. Voltages outside of listed ranges may indicate a bad power supply module; replace with a known good module.

Table 4. Power Supply Test Points

PS TEST POINT	DC VOLTAGE RANGE
+7	+6.0 to +8.0
-7	-6.0 to -8.0
+15	+13.0 to +16.0
-15	-13.0 to -16.0

Warning: *Power supply components may be hot when the power supply has been operating. To prevent burns, do not touch components when removing power supplies.*

COMMUNICATIONS INTERFACE SETUP

The CI5705 can be used to control operation of modules within the S5000 frame. This is accomplished via communications through a 9-pin D-subminiature connector located on the back of the unit labeled NTWK EIA-485. Communications to the S5000 must adhere to the RS-485 or RS-422 communications protocol.

The NTWK EIA-485 connector on the rear of the S5000 utilizes the pinout detailed in the table which follows.

Table 5. NTWK EIA-485 Pin Assignment

PIN #	FUNCTION	DIRECTION
1	Ground	---
2	Receive A	Output- Rx Data (A)-
3	Transmit B	Input- TxData (B)+
4	Receive Common	---
5	N/C	---
6	Ground	---
7	Receive B	Output- Rx Data (B)+
8	Transmit A	Input- Tx Data (A)-
9	Ground	---

Computers equipped with only RS-232 communications ports will require an RS-232-to-RS-422/485 converter like the B&B Electronics model #4WSD9R (http://www.bb-elec.com/bb-elec/literature/4WSD9R-3903ds.pdf for more information), or others, to successfully communicate with the S5000 frame. Carefully check the pinout of the device you select. If it does not match the above information, an adapter cable may need to be made.

The CI5705 communications interface needs to have a number of parameters configured for proper operation when connected to a master controlling device via the NTWK EIA-485 connector on the rear of the S5000.

Each frame in the system must have its own identity. The identification code is assigned to the frame using the first three DIP switches (SW1,SW2 and SW3) of S2 located at the front of the CI5705 card. The following table indicates the settings required for each Frame ID.

Table 6. Frame ID Setting

FRAME ID	SW1	SW2	SW3
0		RESERVED	
1	OFF	ON	ON
2	ON	OFF	ON
3	OFF	OFF	ON
4	ON	ON	OFF
5	OFF	ON	OFF
6	ON	OFF	OFF
7	OFF	OFF	OFF

Depending upon the controlling device's operating parameters, the CI5705 may need to have its communication speed changed. DIP switches SW4 and SW5 of S2 located at the front of the CI5705 card are used to set the communication speed as detailed in Table 6 below-

Table 7. Communication Speed

SPEED	SW4	SW5
9600	ON	ON
19.2K	OFF	ON
38.4K	ON	OFF
57.6K	OFF	OFF

S5000 SYSTEM THEORY OF OPERATION

See Figure 12. The S5000 frame is a relatively simple system consisting of a metal rack frame, replaceable I/O backplanes on each side of the back of the frame, a power distribution board, and a motherboard. A variety of modules may be inserted into the frame as desired to create a complete signal distribution and processing system.

The I/O backplanes hold the BNC or Phoenix I/O connectors to which the external input/output cables are connected. The plug-in DA modules are fitted with connectors that plug into the backplane BNC or Phoenix connectors to carry I/O signals onto and off of the modules.

A rear motherboard (EM0328) inside the center rear of the frame connects to the I/O modules and, in the case of video cards, connects directly to processing modules via connectors at the corner of each module cell. Reference signals, DC power, and other signals are carried between modules via the motherboard.

A Power Distribution board (EM0326) inside the center rear of the frame connects the external AC power connectors to the Power Supply modules.

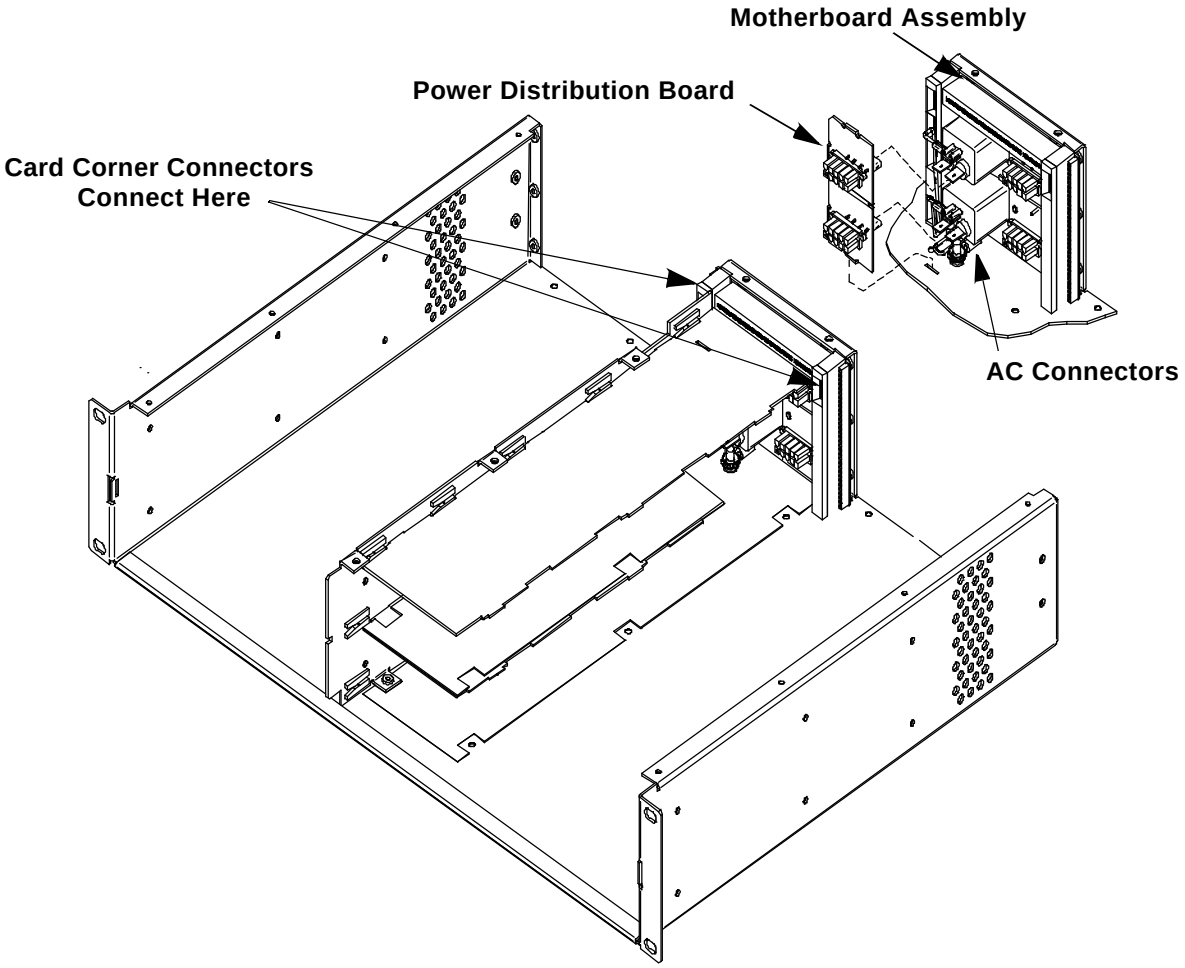

Figure 12. S5000 Frame Exploded View

MAINTENANCE

The S5000 does not require any periodic electrical or physical maintenance. You may want to check the system's indicators occasionally to ensure that the system is operating normally and to make sure cooling air flow through the fan in the front of the frame is unobstructed.

Fuse Replacement

Fuses are located on Power Supply modules. If a problem occurs on a module, the first thing to do is check the fuses. The following table lists the fuses:

Table 8. Power Supply Fuses

LOCATION	FUSE VALUE
Power Supply AC Line Fuse	5 x 20 MM Time-Delay 1.25A

Warning: *Dangerous voltages and high temperatures are present on the Power Supply Card. Take precautions to prevent burns and electric shock: Do not touch exposed wires, connecting pins, heat sinks, or components. Handle the board by its edges.*

TROUBLESHOOTING

Many system troubles are caused by easily-corrected errors, such as poor quality or missing input or reference signals. Table 9 lists common problems and their solutions in approximately the most likely order of occurrence. Try troubleshooting the system yourself, and if you are not successful, call Sigma Electronics Technical Support, as explained near the front of this manual.

In the event that a problem is caused by a bad circuit board, swapping the bad board with a replacement circuit board is the quickest solution. If you need to order replacement boards or other assemblies, call Sigma Electronics Technical Support.

Table 9. System Troubleshooting

SYMPTOM	POSSIBLE CAUSES AND SOLUTIONS
System not powering up.	Verify that the power cord(s) are plugged into the frame and the AC power source. Use a voltmeter to verify the presence of power at the AC mains. Check the DC test points on the front of the Power Supply modules (see Power Supply Test Points on page 16.) Check the AC line fuse on the Power Supply module. See Fuse Replacement on page 22.
One or a few modules not powering up or not operating properly.	Check that the modules are fully seated in the frame.
Intermittent or missing signal on outputs.	Check input sources to make sure the signal is in good condition at the point where it originates. Check input and output cable continuity while wiggling the cables. Possible low voltage on Power Supply module. Check Power supply test point voltages. See Power Supply Test Points on page 16. Possible bad DA/Processing module. Swap the module with a known good module.

NOTES